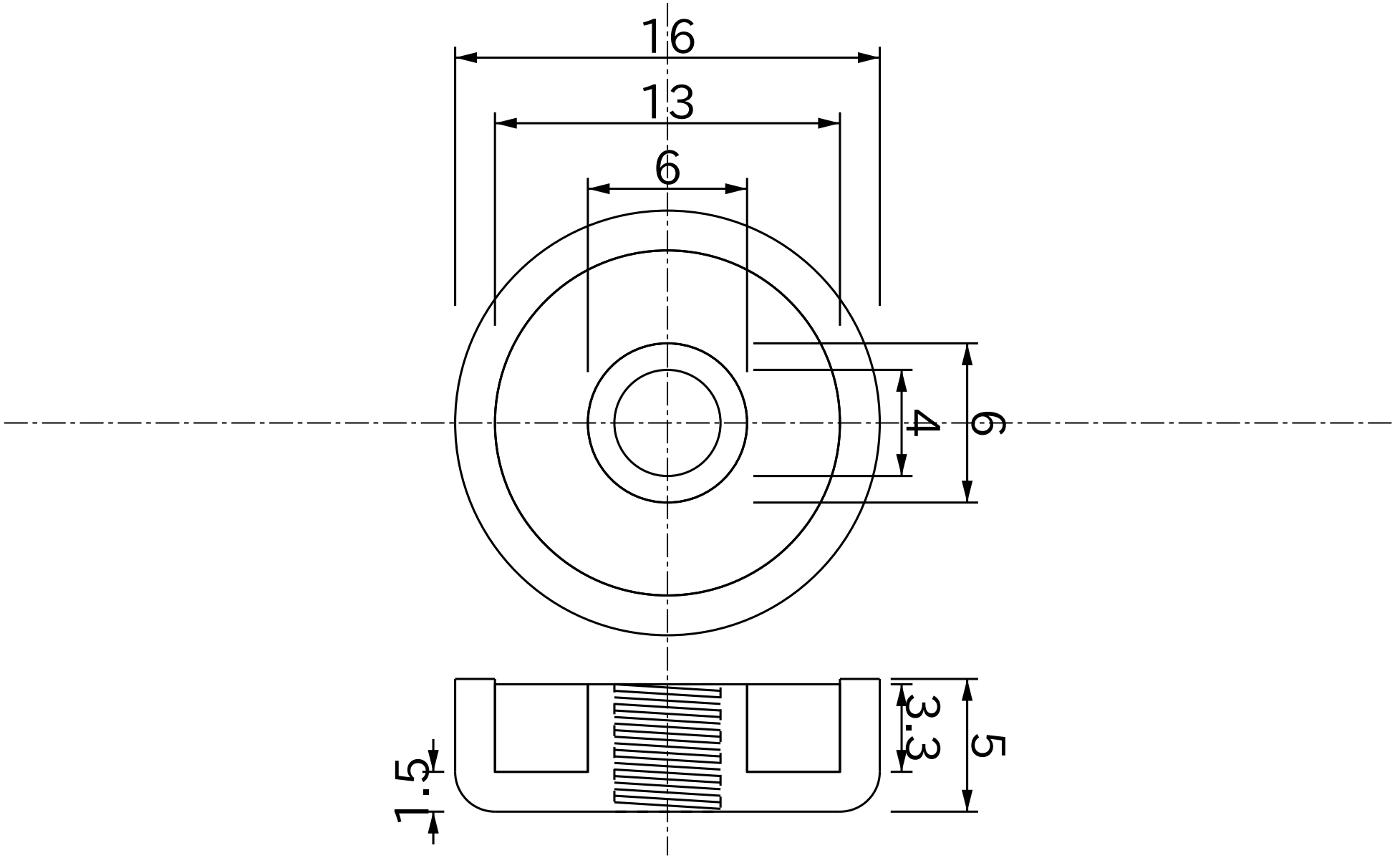

TITLE			DRAWING NUMBER	DATE YYYY/MM/DD	PROJECTION
キャップネオジム Φ16mmx5mm/M4通			H16	2016/07/02	THIRD ANGLE
MATERIAL	GRADE	SURFACE	REMARKS	NAME	APPROVED
キャップネオジム	35	NiCuNi	REACH RoHS Directive		Magfine Corporation

All specifications are subject to change without notice.

Copyright © 2000-2026 Magfine Corporation All Rights Reserved.